FOOD INDUSTRY BEST PRACTICES PROGRAM
Campbell Soup Steam System Assessment

CONSULTANT DRAFT FINAL

CALIFORNIA ENERGY COMMISSION

March 2013
CEC

Jerry Brown, *Governor*

Prepared By:

California Institute of Food and Agricultural Research
University of California Davis
Davis, CA 95616

Contract Number: 400-10-013

Primary Author(s):

Ricardo Amón, CIFAR
Mike Maulhardt, CIFAR
Tony Wong, P.E. California Energy Commission
Donald Kazama, P.E. KWW Energy Services

Prepared For:
California Energy Commission

Lance Shaw
CEC Contract Manager

John Nuffer
Office Manager
Appliances and Process Energy Office

Dave Ashuckian
Deputy Director
Efficiency and Renewable Energy Division

Robert Oglesby
Executive Director

Acknowledgements

CIFAR would like to thank facility management and staff for their assistance with the assessment and their contributions to the report.

Table of Contents

Executive Summary 6
Background 6
Research Methods 6
Operational Characteristics 7
Energy Conservation, Efficiency and Combined Heat and Power Options: 7
Summary: 10
BOILER AND STEAM SYSTEM ASSESSMENT 11
Introduction 11
Research Methods 11
Lessons Learned 11
The Water Energy Nexus (WEN) Steam ESA 12
Tomato Facility Process Overview 12
Tomato Facility Steam System Characteristics 13
Operational Conditions 14
Steam Turbines 16
Steam System Assessment Tool (SSAT) Model Results 16
Energy Conservation, Efficiency and Combined Heat and Power Options: *20*
SSAT CHP Model: 23
CHP Environmental Benefits: 24
Pacific Gas and Electric Self-Generation Incentive Program (SGIP): 25
Adopt Steam Traps Management Program 26
Summary of Recommendations 26
Appendix A. 27
Heat Recovery Best Practices 27
Appendix B 30
SSAT CHP Project Results Summary 30
Appendix C 31
Steam Turbines 31
Appendix C 33
DOE Insulation Publications 33
Appendix D. 35
Steam Trap Maintenance 35

Executive Summary

Background

This report provides results from a Steam Energy Savings Assessment (ESA) conducted by two US Department of Energy (DOE) Certified Energy Experts during the summer of 2012. The DOE's ESA whole systems approach includes data collection and analysis of the steam system's generation, distribution, end-use and recovery assets. This report supports research conducted by the University of California, Davis to pilot the Water Energy Nexus (WEN) at a California tomato processing facility.

The Steam ESA calculates system efficiency, identifies water and energy conservation measures and calculates the potential to install a combined heat and power (CHP) system. The UC Davis research also identifies electric energy efficiency and conservation opportunities to improve the steam system's water supply and recovery infrastructure. The CHP project has the technical potential to generate 1.4 million kilowatt hours (kWh) of electricity and achieve CO2 emission reductions at the power station equivalent to 724 US tons[1]

Research Methods

The Steam ESA was conducted by US DOE Certified Energy Experts utilizing DOE data collection protocols and evaluation software tools[2]. Specifically:

- The Steam System Assessment Tool (SSAT)
- The 3E Plus Insulation Calculator (3E+)
- The Pump System Assessment Tool (PSAT)

<u>The following information was obtained to conduct the ESA:</u>

- Natural gas consumption, costs, annual operating hours.
- Steam generation system data: boiler flue gas temperature and oxygen were measured to estimate boiler efficiency; blow down rates.
- Steam distribution system data: wall temperature of steam distribution system was measured to estimate piping insulation needs; steam traps.
- Steam end use and condensate systems data: amount of steam used by processes and steam turbines, and amount of condensate return.
- Feed water and condensate return systems power data: motor and pump name plate, flow rates and total dynamic head data of installed motors and pumps.
- Maintenance information.

[1] **2,000 pounds.**

[2] US DOE Industrial Best practices Program. APPENDIX A. http://www1.eere.energy.gov/manufacturing/tech_deployment/software_ssat.html

Operational Characteristics

The Steam ESA was conducted during full capacity operating conditions at the tomato processing facility. The DOE SSAT software is used to model boiler performance using the following assumptions:

- Steam system performance is calculated at 2,000 hours of operation per year.
- Natural gas fuel costs of $4.90 per MMBTU ($0.49 per therm) includes transportation and ancillary charges.
- Electricity rate of $0.15 per kWh, including ancillary costs.

<u>The SSAT model provides the following boiler operational characteristics:</u>

- **Boilers # 1 and # 2** operate at 84 percent boiler efficiency, producing 108,000 pounds of steam per hour at 150 psig. The seasonal cost to operate boilers # 1 and # 2 is $1,404,000.

- **Boiler #3** operates at 84 percent boiler efficiency, producing 137,000 pounds of steam per hour at 250 psig. The seasonal cost to operate boiler # 3 is $1,803,000.

    - 72,000 pounds of 250 psig steam per hour is used by high pressure steam processes.
    - 65,400 pounds of 250 psig steam per hour is passed through a pressure reducing valve (PRV) to reduce steam pressure to 150 psig and be used by low pressure steam processes.

- The three boilers consume 6.5 million therms of natural gas at a total cost of $3,207,000.

Energy Conservation, Efficiency and Combined Heat and Power Options:

Supply-side efficiency improvements include; installation of blow down heat exchangers, blow down flash steam recovery systems, insulating steam valves, installing and maintaining steam traps and the installation of fuel and steam flow meters. Table ES1 shows specific project results

Table ES1. Supply Side Energy Efficiency Measures

Steam ESA Boiler Recommendations	Annual Savings						Estimated Project Cost	Simple Payback
	Natural Gas		CO2 Emissions		Water			
	Therms/hr	$	ton/yr	$	Gal/h	%	$	Yrs*
Boilers #1, #2								
Install Blow Down Heat Exchanger	5.126	5,023	59.5		1	0.3	5,000	<1.0
Install Blow Down Flash Steam	3.381	3,313	39.5		1	0.2	3,000	<1.0
Install Both[3]	6.958	8,000	162		1	0.5	7,000	<1.0
Steam Trap Maintenance Program	1.057	1,000	12.5		9	3.4		
Boiler # 3								
Install Blow Down Heat Exchanger	7.156	7,013	83		1		5,000	0.7
Install Blow Down Flash Steam to Low Pressure	1.682	2,000	19.5		15	4.4	3,000	<1.5
Install Both[4]	8.539	8,000	99		16		8,000	1
Steam Trap Maintenance Program	3.692	4,321	43		30	8.4		
Supply-Side Insulation Recommendations								
Insulating ten 12" Valve, 300 F Steam	3,000	1,518	35				2000	1.3

The facility can increase seasonal cash flow revenue by over $20,000 by adopting all ESA Supply-Side recommendations.

Steam Management options are available that can enhance steam productivity or the generation of electricity in Combined Heat and Power (CHP) mode.

The Steam ESA identifies that Boiler # 3 is producing 137,400 pounds of steam per hour at 250 psig, but only 72,000 pounds of 250 psig steam per hour are used by the Multipurpose evaporation system. The remaining 65,400 pounds of steam is passing through the pressure reducing valve (PRV) to deliver 150 psig steam to additional end-use assets. This system inefficiency can be improved with the following options:

[3] The interactive effect results in lower savings when installing both the blow down heat exchanger and flash blow down.

[4] The interactive effect. Boiler #3 has a broken (malfunctioning) blow down heat exchanger.

Option 1.

Reduce steam generation from Boiler # 3 by 50,000 pounds per hour and instead produce the 150 psig steam using boilers # 1 and # 2.

Option 2.

Install a Back-Pressure Turbine (BPT) to generate over 718 kW of Combined Heat and Power (CHP) electricity. The CHP installation has the technical potential to generate 1.4 million kWh of electricity from the excess 65,400 pounds of steam at 250 psig produced by boiler # 3. The CHP operation will demand an additional 7 MMBTU of natural gas.

Table ES2. Summary of Steam Management ESA Recommendations

Energy Management Projects	Annual kWh Savings	Gas Savings, MMBtu/yr	Cost Savings	Project Cost	Simple Payback, yrs
Option 1 Produce 50,000 lb/hr 150 psi steam in boilers #1,#2.		1,225	$6,000	$0	0
Option 2 Install Back Pressure Turbine using 250 psig. to generate 718 kW.	1,437,086	-6,939	$183,000	$1,077,000	6
Option 3. Replace electric motors with steam turbines	1,437,086		NA	NA	

Combined Heat and Power - Using current electricity rates, the CHP installation can generate $183,000 per season, for a 5.9 years simple pay-back period. The payback period may be reduced by capturing carbon allocations for CO2 emission reductions that occur at the power station. The equivalent 724 US tons in emission reductions will need to be negotiated with the utility provider. Another cost reduction measure would be for the facility to request that Pacific Gas and Electric Company offer a "cogeneration deferral rate"[5].

Demand-side efficiency improvements include infrastructure projects and industrial Best Practice measures. The installation of insulation on uncovered valves and piping, and insulating the process heat exchangers has the potential to add over $7,000 per season to the facility's cash flow.

Table ES3. Summary of Steam ESA Demand-Side Recommendations

Steam ESA Recommendations-Demand-Side	Annual Savings						Estimated Project Cost	Simple Payback
	Natural Gas		Electricity		Water			
	MMBTU	$	kWh	$	Gal	$	$	Yrs*
Insulate Uncovered Valves and Piping	1,514	7,417						

[5] Each of the California IOUs has PUC-approved "cogeneration deferral rates" that allow them to offer a customer a discounted rate if they forego their cogeneration project. U.S. DOE Pacific Region Clean Energy Application Center, 2011. http://www.pacificcleanenergy.org/STATES/california/PRAC_CA_Plan_2011.pdf

Further research is needed to evaluate the energy savings potential and economic return from additional infrastructure projects; including the installation of a heat exchanger on the vent from the condensate storage tank, new steam traps and condensate drainage system on steam headers, the use of pressurized hot brake systems, and the use of vacuum pumps. Additional energy savings may be achieved by improving the efficiency of the boilers feedwater pumping system.

Summary:

The facility's boiler efficiency is high but there are opportunities to enhance steam system productivity. Short term low-cost measures include the installation of steam blow down recovery systems, insulating steam valves, and adopting steam trap maintenance practices. Another no-cost short term measure is to switch partial steam production from boiler # 3 to boilers # 1 and # 2. A medium-term opportunity is to install a combined heat and power system to produce 718 kilo-Watts (kW) of distributed electricity generation. In lieu of adopting the CHP opportunity, the facility may be eligible for a "cogeneration deferral rate" from the Pacific Gas and Electric Company.

BOILER AND STEAM SYSTEM ASSESSMENT

Introduction

A steam system Energy Savings Assessment (ESA) was conducted by US DOE Certified Steam Energy Experts at a California tomato processing facility, starting on August 10, 2012. DOE Experts followed assessment principles developed by the Steam Challenge Program[6]; designed to collect supply and demand-side data and to use DOE software tools to evaluate system performance. The DOE's whole systems approach evaluates the steam system includes generation and distribution (supply side) assets, end-use and recovery (demand side) assets.

In addition to identifying energy conservation and efficiency improvements, the ESA identified the opportunity to install a combined heat and power (CHP) system, with the potential to generate 700 kW utilizing 250 psi steam already produced but reduced to 150 psi using pressure reducing valve.

Research Methods

The Steam ESA was conducted by US DOE Certified Energy Experts utilizing DOE data collection protocols and evaluation software tools[7]. Specifically:

- The Steam System Assessment Tool (SSAT)
- The 3E Plus Insulation Calculator (3E+)
- The Pump System Assessment Tool (PSAT)

<u>The following information was obtained to conduct the ESA:</u>

- Natural gas consumption, costs, annual operating hours.
- Steam generation system data: boiler flue, gas temperature and oxygen were measured to estimate boiler efficiency; blow down rates.
- Steam distribution system data: wall temperature of steam distribution system was measured to estimate piping insulation needs; steam traps.
- Steam end use and condensate systems data: amount of steam used by processes and steam turbines, and amount of condensate return.
- Feed water and condensate return systems power data: motor and pump name plate, flow rates and total dynamic head data of installed motors and pumps.
- Maintenance information.

Lessons Learned

A number of discrepancies where identified between boiler control system data and SSAT inputs and calculated results. Energy Experts confirmed that the boiler monitoring equipment is not

[6] **S**team Challenge is a voluntary, technical assistance program to help U.S. industry become more competitive through increased steam system efficiency.http://www1.eere.energy.gov/manufacturing/tech_deployment/pdfs/stmchlng.pdf

[7] US DOE Industrial Best practices Program. APPENDIX A. http://www1.eere.energy.gov/manufacturing/tech_deployment/software_ssat.html

reporting accurate results, in the following areas:

- Gas measurements are used to calculate that Boilers # 1, # 2 generate a total of 116,000 pounds of steam per hour at 150 psig. Of which 108,000 lbs/hr is used for process and 8,000 lbs/hr is used to feed the de-aerator.
    - Boiler's Logic Controller (LC) reports 156,400 lbs/hr

- SSAT calculations report Boiler # 3 producing steam at 250 psig, the boiler LC reports 257-260 psig steam. No data was collected that recorded readings near 280 or 300 psig.

- Boiler # 3 LC reports boiler efficiency at 70.2% instead of the measured and calculated 84 percent because plant measurement is obtained prior to the use of the economizer. Measurement instruments should be re-installed at a location after the economizer. At 84% boiler efficiency, boiler # 3 generates 147,400 lbs/hr of 250 psig steam. while the facility instruments report 140,100 lbs/hr

The facility does not have steam flow meters to measure the amount of steam generated by each boiler. Energy Experts conducted an energy mass balance for the boiler system, using natural gas consumption from utility billing data.

The Water Energy Nexus (WEN) Steam ESA

The UC Davis WEN project is working with a California tomato processing facility to obtain operational data and site measurements of the steam and water pumping systems. A WEN Model is developed to evaluate the amount of energy that is required to extract, filter, pressurize, and heat or discharge of water resources. The model identifies both the supply and the demand-side of the water and energy resources. Each point in the production process where energy is used to power water is then established as a WEN Point. A WEN Equation is derived to calculate the water energy intensity at that process. The steam system is a WEN Point with assets that include the boilers, tanks, pumps and fans needed to produce and deliver steam resources to the facility. This Steam ESA report contributes data to the WEN Model.

Tomato Facility Process Overview

This facility operates at full capacity 24 hours per day, 7 days per week between the middle of July through mid-October. The facility can process between 240 to 270 truckloads of tomatoes per day, the equivalent of 12 to 13.5 million pounds[8].

Tomatoes are unloaded from truck bins to collection channel flumes, moving fruit along conveyor belts and water-driven flumes. Tomatoes are rinsed and sorted for quality before being delivered to the production sections of the facility. Tomatoes that are processed into paste products are delivered to the hot brake chopping units. From the hot brakes the tomato pulp is transported by

[8] http://solanocountybusinessnews.blogspot.com/2009/10/from-davis-fields-to-dixon-plant.html

product pumps to the extraction units that produce refined juice. Tomatoes that are used for diced products are delivered to steam powered skin-peelers and dicing machines.

The juice produced for paste is stored in tanks and consistently pumped to the evaporation units. Multipurpose evaporation systems and high density evaporators are used to gradually increase juice viscosity to desired finished stages. Tomato paste cooling and sterilization is achieved with the use of steam injection and flash cooling technologies. Sterilized tomato paste is cooled down before being injected into pre-sterilized aluminum bags, using aseptic packaging systems. Diced tomatoes are also packaged into aseptic bags.

Tomato Facility Steam System Characteristics

The steam system components include generation, distribution, end use and recovery[9]. The facility operates from July to October, 24 hours a day, seven days a week to produce tomato paste and dice products. All products are packaged using aseptic bags and delivered to sister company locations around the country.

<u>The steam system includes the following assets:</u>

Boilers:

- Boilers # 1 and # 2 (Nebraska) are each rated to produce 100,000 pounds per hour steam at 200 pounds per square inch gauge (psig).
    - Each boiler is equipped with a 100 horse power (HP) variable frequency fan.
    - The boiler endusers are equipped with 30 steam traps.
- Boiler # 3 (Babcock Wilcox) is rated to produce 150,000 pounds per hour steam at 750 psig.
    - The boiler is equipped with a 400 HP variable frequency fan.
    - The boiler endusers are equipped with 10 high pressure (250 psig) header steam traps, and 90 low pressure (<150 psig) header steam traps.
- Boiler # 4 (Mohawk) is rated to produce 3,540 pounds per hour steam at 200 psig This boiler is fired at minimum readiness and used as a back-up.

De-aerator Tank:

- The deaerator (DA) tank is supplied water from two reverse osmosis (RO) systems, and the condensate recovery tanks.
    - Boilers # 1 and # 2 feed water are supplied from the DA tank using two 150 HP pumps and two 25 HP pumps.
    - Boiler # 3 feedwater is supplied from the DA tank using a 50 HP electric driven pump and one 55 HP steam driven pump.

Condensate Recovery System:

- The boiler room recovery tank supplies steam condensate and vapor condensates from evaporators (tomato water) to the DA using two 20 HP pumps.
- The Mechanical Vapor Recompression (MVR) condensate recovery tank supplies the boiler recovery tank with a 7.5 HP pump.
- The hot brake condensate recovery tank operates a 10 HP pump.

[9] US DOE Steam Systems Program
http://www1.eere.energy.gov/manufacturing/tech_deployment/steambasics.html

Operational Conditions

The Steam ESA was conducted during full capacity operating conditions at the tomato processing facility. The DOE SSAT software is used to model boiler performance using the following assumptions:

- Steam system performance is calculated at 2,000 hours of operation per year.
- Natural gas fuel costs of $4.90 per MMBTU ($0.49 per therm) includes transportation and ancillary charges.
- Electricity rate of $0.15 per kWh, including ancillary costs.

The SSAT model provides the following boiler operational characteristics:

- **Boilers # 1 and # 2** operate at 84 percent boiler efficiency, producing 108,000 pounds of steam per hour at 150 psig. The seasonal cost to operate boilers # 1 and # 2 is $1,404,000.

- **Boiler #3** operates at 84 percent boiler efficiency, producing 137,000 pounds of steam per hour at 250 psig. The seasonal cost to operate boiler # 3 is $1,803,000.

    - 72,000 pounds of 250 psig steam per hour is used by high pressure steam processes.
    - 65,400 pounds of 250 psig steam per hour is passed through a pressure reducing valve (PRV) to reduce steam pressure to 150 psig and be used by low pressure steam processes.

- The three boilers consume 6.5 million therms of natural gas at a total cost of $3,207,000.

Supply-Side (Generation & Distribution)

The boiler system produces the steam required by industrial condensers to evaporate water contained in tomatoes, to heat and peel fruit. In addition to boilers, the supply-side of the steam system contains deaerator (AD) tank, feed water pumps, condensate recovery pumps and tanks, and boiler combustion fans. Well water is treated using a Reverse Osmosis (RO) system before delivery to the AD tank. The following schematic shows the closed loop between the generation, distribution, end use and recovery assets of the steam system[10].

[10] US DOE, Improving Steam System Performance: A Sourcebook for Industry, Second Edition. http://www1.eere.energy.gov/manufacturing/tech_deployment/pdfs/steamsourcebook.pdf

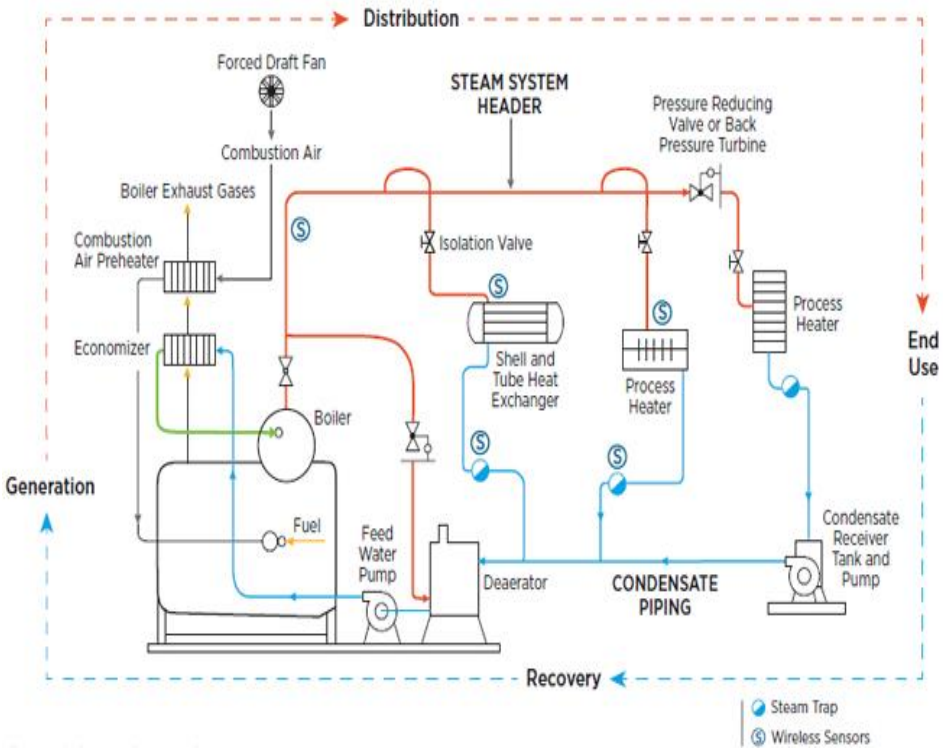

Figure 1. Standard Steam System Components

Demand-Side (End Use and Recovery)

The end-use assets include multipurpose evaporation system consisting of Mechanical Vapor Recompression (MVR) evaporator systems, hot brake systems, high and low density evaporator systems, tomato peelers and flash coolers.

In addition to these end-use components, steam is also produced to fuel turbines delivering steam power to evaporators. The condensate recovery system includes supply and demand-side steam traps, three steam condensate tanks, feedwater pumps and the deaerator (DA) tank. Additional tomato water is recovered and also added to the DA tank as boiler feedwater.

<u>The demand-side of the steam system includes the following assets:</u>

- Two Mechanical Vapor Recompression (MVR) systems.
- Six T-60 Triple-effect tomato evaporators.
- Two hot brake rotary coil systems.
- Six high and low density evaporator systems,
- One Tomato peeler.
- Two Flash coolers.
- Twelve steam powered turbines.

Steam Turbines

The Steam ESA conducted a Steam Turbine Inventory to identify equipment characteristics and estimate steam consumption from using turbine shaft power to move water and product. Table 1 provides details of installed steam turbines at the facility.

Table 1. Steam Turbine Inventory

Function	Serial #	HP	Inlet PSI	Exhaust	Power Nozzles	Est. Turbine Steam Use @ 250 psig 32#/HP - HR, 150 psig - 39.5 HP-Hr	Campbell's Steam Estimate	Campbell's Est. Evaporation
HD North 1st Circ	94H9001	120.00	140.00	15.00	1 - Open	4,740.00		
HD 2nd	94H9004	169.00	140.00	15.00	1 - Open	6,675.50		
						11,415.50	**14,000.00**	**31,500.00**
HD Middle 1st Circ	94H9002	120.00	140.00	15.00	1 - Closed	4,740.00		
HD 2nd	94H9003	169.00	140.00	15.00	1 - Open	6,675.50		
						11,415.50	**13,700.00**	**26,500.00**
HD South 1st Circ	95H1001	120.00	140.00	15.00	1 - Closed	4,740.00		
HS 2nd	95H1002	169.00	140.00	15.00	1 - Open	6,675.50		
						11,415.50	**13,700.00**	**26,500.00**
West T-60 - 1st	CYRT	300.00	125.00	15.00	None	11,850.00		
2nd	V-2003-3	350.00	113.70	7.10	1 - Open	13,825.00		
						25,675.00	**31,500.00**	**86,000.00**
Middle T-60 - 1st	V2077	350.00	125.00	20.00	None	13,825.00		
2nd	CYRL	300.00	150.00	12.00	1 - Open	11,850.00		
						25,675.00	**31,500.00**	**66,000.00**
East T-60 1st	CYRT	185.00	125.00	17.00	None	7,307.50		
2nd	V-2003-7	350.00	113.70	7.10	1 - Open	13,825.00		
						21,132.50	**31,500.00**	**66,000.00**
MVR Vapor Compressor	Dresser D5282	1,375.00	250.00	10.00	1 - Open	44,000.00		
MVR Pump	Dresser D5283	350.00	250.00	10.00	1 - Open	11,200.00		
			250.00			**55,200.00**	Unknown	**71,000.00**
MPE MVR Compressor	DYRT III	380.00	250.00	10.00	1 - Open	12,160.00	11,500.00`	
MPE MVR 1st Pump	CYRT III	130.00	250.00	10.00	1 - Open	4,160.00	4,150.00	
						16,320.00	**15,650.00**	20,000.00
MPE Triple 1st Effect	DYRT III	240.00	250.00	10.00	1 - Open	7,680.00		
MPE Triple 2nd Wffect	CYRT III	80.00	250.00	10.00	1 - Open	2,560.00		
						10,240.00	**15,725.00**	48,050.00
					TOTALS	**188,489.00**	**167,275.00**	**441,550.00**
Boiler # 3 Feed Water	Dresser D5284	155.00	250.00			4,960.00		

Steam Turbine Integration with MVR System – The development of multiple effect evaporators transformed the production of tomato paste by allowing five and six time concentrations of tomato paste products. The use of steam turbines in double and triple effect evaporator systems compensates for lower turbine efficiency when compared to electric motors. In addition to generating shaft horse power to operate compressor pumps, mechanical vapor recompression compressors are used to raise the pressure of low pressure vapor to higher pressures and temperature, thus recycling vapors within the evaporators.

The steam turbine thermodynamic efficiency is determined by the steam rate provided by the turbine manufacturer. At a steam rate of 32.2 lb/hp-hr, the turbine's mechanical shaft efficiency is estimated to be approximately 21 percent. Additional thermal energy efficiency results from recapturing available heat from turbines. At a steam rate of 39.5 lb/hp-hr for low pressure applications, the turbine's mechanical shaft efficiency is estimated to be approximately 19 percent. Efficiency calculation is based on the enthalpy of steam at inlet and exhaust pressure.

Steam System Assessment Tool (SSAT) Model Results

US DOE Energy Experts utilized the SSAT to input system data and develop system models, using the following assumptions:

- Steam system use is calculated at 2,000 hours per year.
- Fuel costs, transportation and ancillary charges, $4.90 MMBtu/therms; $0.49 a therm of natural gas.

The SSAT models provide steam system performance characteristics for boilers # 1, # 2, and # 3. Data was obtained during full capacity operating conditions.

As follows:

Two **Nebraska (# 1 and # 2) fire tube boilers** each rated to produce 100,000 pounds per hour steam at 200 pounds per square inch gauge (psig).

- Boiler # 1 Operating Conditions:
  - Consumes 70.85 million Btu per hour (MMBtu/hr).
  - Produces 54,000 pounds of steam per hour at 150 psig.
  - Flue gas analysis shows flue gas oxygen content of 5.1 percent with stack temperature measured at 272 F.
  - Boiler efficiency was calculated at 84 percent.
  - Steam condensate recovery at 90 percent.

- Boiler # 2 Operating Conditions:
  - Consumes 72.1 million Btu per hour (MMBtu/hr).
  - Produce 54,000 pounds of steam per hour at 150 psig.
  - Flue gas analysis shows flue gas oxygen content of 4.2 percent with flue gas temperature measured at 308 F.
  - Boiler efficiency was calculated at 84 percent.
  - Steam condensate recovery at 90 percent.

The seasonal cost to operate boilers # 1 and # 2 is $1,404,000.

Figure 1 provides a schematic representation of the combined operational conditions for boilers # 1 and # 2.

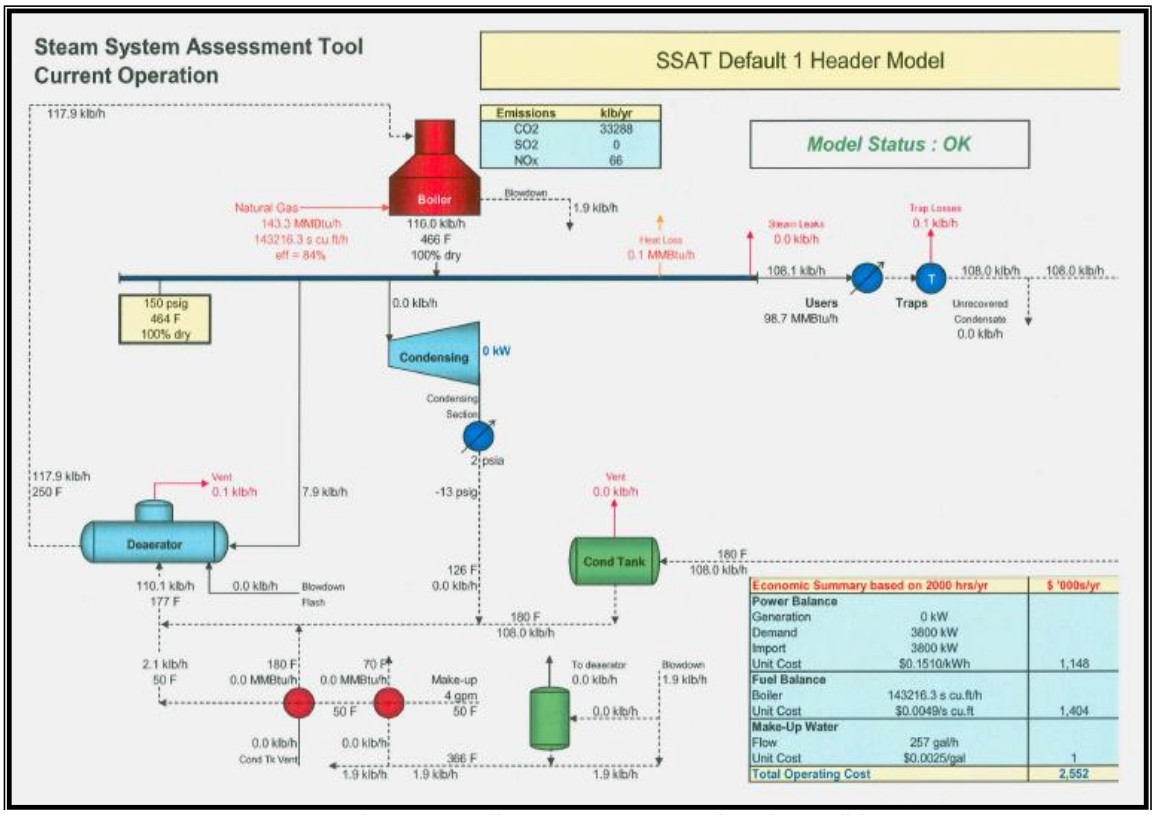

Figure 1. Boiler # 1, # 2, Operational Conditions

One **Babcock Wilcox (# 3) fire tube boiler** is rated to produce 150,000 pounds per hour steam at 750 psi.

- Boiler # 3 Operating Conditions:
  - Consumes 184.3 million Btu per hour (MMBtu/hr).
  - Flue gas analysis shows flue gas oxygen content of 3.5 percent with flue gas temperature measured at 318 F.
  - Produces 137,000 pounds of steam per hour at 250 psig.
    - 72,000 pounds of steam at 250 psi are delivered to multipurpose evaporation system that consists of Mechanical Vapor Recompression (MVR) unit.
    - A pressure reducing valve (PRV) is used to deliver 65,000 pounds

The seasonal cost to operate boiler # 3 is $1,803,000.

Figure 2 provides a schematic representation of the combined operational conditions for boiler # 3.

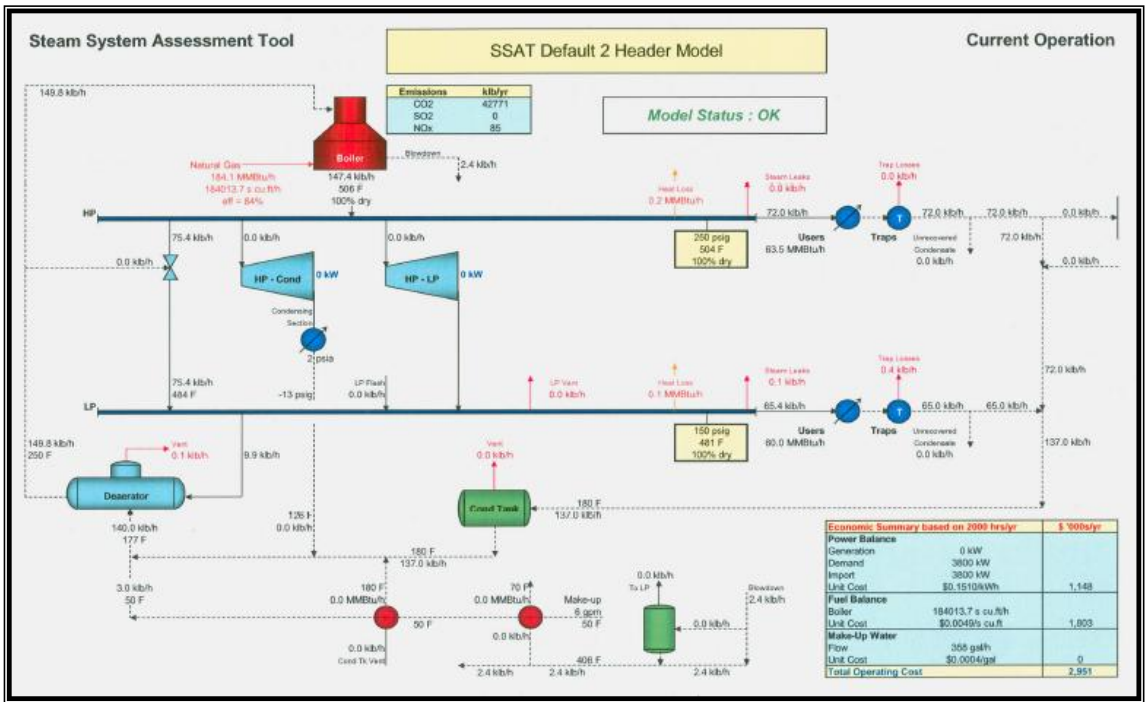

Figure 2. Boiler # 3 Operational Characteristics

The three boilers consume 6.5 million therms of natural gas per season.

Total annual cost $3,207,000.

Energy Conservation, Efficiency and Combined Heat and Power Options:

Supply-side efficiency improvements include the installation of blow down heat exchangers, blow down flash steam recovery systems, insulating steam valves, installing and maintaining steam traps, and the installation of fuel flow meters. Table 1 provides energy conservation and cost savings from the installation of Supply-Side Energy Efficiency Measures (EEMs).

Table 2. Supply-Side Energy Efficiency Measures

Steam ESA Boiler Recommendations	Annual Savings						Estimated Project Cost	Simple Payback
	Natural Gas		CO2 Emissions		Water			
	Therms/hr	$	ton/yr	$	Gal/h	%	$	Yrs*
Boilers #1, #2								
Install Blow Down Heat Exchanger	5.126	5,023	59.5		1	0.3	5,000	<1.0
Install Blow Down Flash Steam	3.381	3,313	39.5		1	0.2	3,000	<1.0
Install Both[11]	6.958	8,000	162		1	0.5	7,000	<1.0
Steam Trap Maintenance Program	1.057	1,000	12.5		9	3.4		
Boiler # 3								
Install Blow Down Heat Exchanger	7.156	7,013	83		1		5,000	0.7
Install Blow Down Flash Steam to Low Pressure	1.682	2,000	19.5		15	4.4	3,000	<1.5
Install Both[12]	8.539	8,000	99		16		8,000	1
Steam Trap Maintenance Program	3.692	4,321	43		30	8.4		
Supply-Side Insulation Recommendations								
Insulating ten 12" Valve, 300 F Steam	3,000	1,518					2000	1.3

Assumptions: 2,000 hours of operation; $0.49 per therm of natural gas.

Installation of Blowdown Heat Exchangers

The installation of blow down heat exchangers to preheat makeup water in boilers # 1 and # 2 is estimated to save 10,252 therms of natural gas and generate $5,000 of cash flow revenue. The project simple payback is less than one year.

Energy savings from the installation of heat exchangers are larger with high-pressure boilers[13].

[11] The interactive effect results in lower savings when installing both the blow down heat exchanger and flash blow down.

[12] The interactive effect. Boiler #3 has a broken (malfunctioning) blow down heat exchanger.

The heat exchanger for boiler # 3 will save 14,312 therms of natural gas and generate $7,013 in free cash flow revenue. The project simple payback is less than one year.

Additional technical information to evaluate the technical benefits of installing heat recovery systems is available in Appendix B.

Install Blowdown Flash Steam

The installation of a blow down flash steam system for boilers # 1and #2 are estimated to save 6,762 therms of natural gas while generating $3,313 in cash flow revenue. The project is estimated to cost $3,000 to implement resulting in a simple payback of less than one year.

The installation of a blow down flash steam system for boiler # 3 results in 3,364 therms of natural gas saved and generates $1,648 for less than a 1.5 year payback period.

Boiler #3 has a broken (malfunctioning) blow down heat exchanger.

Steam Management options are available that can enhance steam productivity or the generation of electricity in Combined Heat and Power (CHP) mode.

The Steam ESA identifies that Boiler # 3 is producing 137,400 pounds of steam per hour at 250 psig, but only 72,000 pounds of the 250 psig steam is used by the multipurpose evaporation system. The remaining 65,400 pounds of steam is passing through the pressure reducing valve (PRV) to deliver 150 psig steam to additional end-use assets. There is an opportunity to enhance system efficiency by considering the following options:

Option 1.

Reduce steam generation from Boiler # 3 by 50,000 pounds per hour and instead produce the 150 psig steam using boilers # 1 and # 2. This option would result in natural gas savings of 1,225 MMBtu and generate $6,000 in cash flow revenue, as shown in table 2. However, further investigation reveals that current operational characteristics are used to accommodate for irregularity in the delivery of tomato fruit from the discharge flumes. To maintain flexibility and reliability in total high pressure steam produced and to reduced the loss of steam energy due to the PVR, the ESA recommends the installation of a steam accumulator storage tank.

PG&E's Commercial Industrial Boiler Efficiency Program (CIBEP)

The facility qualifies for PGE CIBEP rebates and incentives if it chooses to adopt Steam ESA Energy Efficiency Measures (EEMs).

- $1 per therm saved over 1st. year of installation.
- The incentive is capped at 50 percent of the project cost.

To participate the facility will need to enroll @:

- http://www.enovity.com

[13] DOE Tip Sheet # 10. http://www1.eere.energy.gov/manufacturing/tech_deployment/pdfs/steam10_boiler_blowdown.pdf

Option 2.

Install a Back-Pressure Turbine (BPT) to generate over 718 kW of Combined Heat and Power (CHP) electricity. The CHP installation has the technical potential to generate 1.4 million kWh of electricity from the excess 65,400 pounds of steam at 250 psig produced by boiler # 3.

Although the CHP operation will demand an additional 7 MMBTU of natural gas, the project savings of $183,000 per season will recover the investment in six years using a conservative project cost of over #1 million[14].

[14] 11 20 12, phone call to Mike Jiunta 724-600-8099 Elliot Co. to request a quote for a 700 kW back pressure turbine.

Table 2. Summary of Steam Management ESA Recommendations

Energy Management Projects	Annual kWh Savings	Gas Savings, MMBtu/yr	Cost Savings	Project Cost	Simple Payback/ yrs
Option 1 Produce 50,000 lb/hr 150 psi steam in boilers #1,#2.		1,225	$6,000	$0	0
Option 2 Install Back Pressure Turbine using 250 psig. to generate 718 kW.	1,437,086	-6,939	$183,000	$1,077,000	6

SSAT CHP Model:

Using electricity costs at $0.15 a kWh, the CHP installation can generate $183,000 per season, providing a less than 6 years simple pay-back period. The payback period may be reduced by capturing carbon allocations for 724 US tons of CO2 emission reduction potential that may occur at the power station.

For more details please review the SSAT model results summary in Appendix B.

Figure 3 provides a schematic representation of the CHP system option.

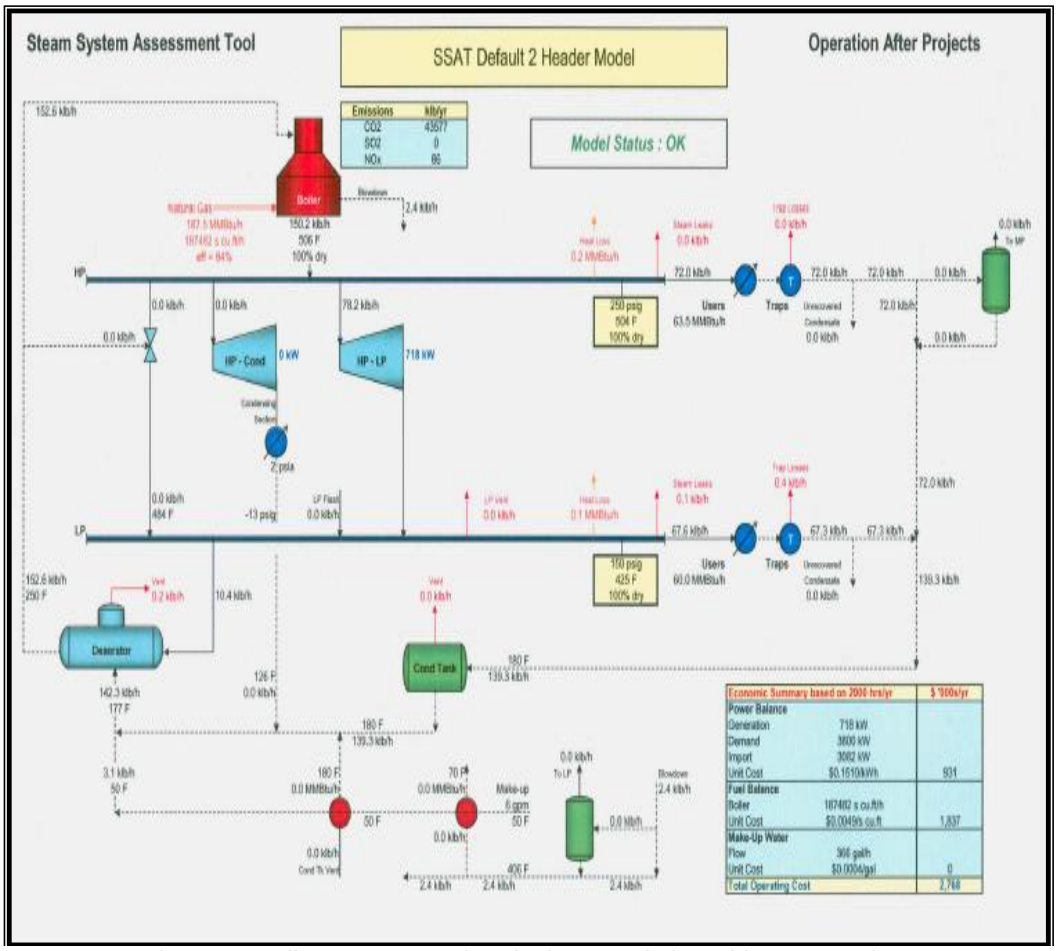

Figure 3. Boiler # 3, Operational Characteristics with CHP Project

CHP Environmental Benefits:

CHP is identified by the California Air Resources Board (CARB) as a cost-effective measure to meet greenhouse gas goals. Governor Brown's executive order calls for the installation of 6,500 MW of additional CHP in California by 2030[15].

Under the CARB's cap and trade program, facilities with CHP systems will be facing lower compliance cost as compared to facilities that have yet to invest in CHP. CARB is expected to conduct formal rulemaking on CHP incentive issues in 2013. Facility management is encouraged to evaluate the technical, economic and environmental benefits of the CHP under future CARB Cap and Trade rules[16].

CIFAR encourages facility management to stay informed about the potential economic and environmental benefits of the CHP option. Another option is for the facility to request that Pacific Gas and Electric Company offer a "cogeneration deferral rate"[17], instead of pursuing the CHP installation.

[15] http://www.arb.ca.gov/cc/capandtrade/assemblyman_fletcher_response.pdf

[16] *CARB plans to exempt the steam or waste heat emissions for all "but for" CHP facilities based on a benchmark until 2015 when both electricity and natural gas will be covered by the program. During this time allowances from the exempted emissions would be retired to maintain the integrity of the overall cap.* http://www.arb.ca.gov/cc/capandtrade/assemblyman_fletcher_response.pdf

[17] Each of the California IOUs has PUC-approved "cogeneration deferral rates" that allow them to offer a customer a discounted rate if

Pacific Gas and Electric Self-Generation Incentive Program (SGIP):

PGE's SGIP funding provides an incentive of $0.50 per watt generated with a non-renewable gas turbine[18].

Demand-side **i**mplementing of insulation measures will save an estimated 1,514 MMBtu of natural gas annually. The project is estimated to cost $31,644 and save $7,417, for a simple pay back of 4.7 years, as shown in Table 4. Appendix C provides more details on technical characteristics of recommended insulation measures and DOE Best Practice publications.

Table 4. Installation Cost Estimate and Simple Payback by Insulation Component

Location/Item/Description	Annual Cost Savings		Installed Cost		Quantity	Total Cost	Simple Payback/Yr
MVR Effect Tubes	$2,681	$5	sq ft	942	sq ft	$4,710	1.76
MVR Product & Vapor Piping	$1,118	$15	LF	90	LF	$1,350	1.21
MVR Compressed Vapor Manifold	$775	$35	LF	20	LF	$700	0.90
T60 Piping to Effect Tubes	$261	$35	LF	8	LF	$280	1.07
Pressurized Hot Break Shell	$354	$12	sq ft	327	sq ft	$3,924	11.09
Paste Sterilizer Steam Line	$33	$35	LF	10	LF	$350	10.62
Paste Sterilizer Steam Accumulator	$29	$5	sq ft	10	sq ft	$50	1.70
MPE Tomato Water Tanks	$735	$5	sq ft	1,356	sq ft	$6,780	9.22
REYMSA Effect Tubes	$586	$12	sq ft	940	sq ft	$11,280	19.23
REYMSA Separator Tanks	$102	$5	sq ft	188	sq ft	$940	9.21
Boiler House Steam Valves & Flanges	$537	$100	ea	10	valves	$1,000	1.86
Boiler #3 DA Tank Manifold	$206	$35	LF	8	LF	$280	1.36
Totals:	**$7,417**					**$31,644**	**4.27**

Note: insulation assumes Type 1 Mineral Fiber (C547-07) for pipes and valves; Type 1B Mineral Fiber Board (C612-04) for boiler shell; either All-Service or aluminum jackets

The energy savings for this project were calculated using the North American Insulation Manufacturers Association (NAIMA) 3E-Plus software version 4. This is an industry-accepted tool that is available through the United States Department of Energy's (DOE) Steam System Tool

they forego their cogeneration project. U.S. DOE Pacific Region Clean Energy Application Center, 2011. http://www.pacificcleanenergy.org/STATES/california/PRAC_CA_Plan_2011.pdf

[18] PGE SGIP http://www.pge.com/mybusiness/energysavingsrebates/selfgenerationincentive/equipmenteligibility.shtml

Suite. This tool provides tables of heat loss values (Btu/ft/yr) for different pipe sizes, types and for different insulation thicknesses.

Adopt Steam Traps Management Program

The Steam ESA recommends establishing a rigorous steam trap management program to ensure there is no live steam leakage into the condensate recovery system. As a rule of thumb between 15-30 percent of the installed steam traps may have failed in steam traps that have not been maintained for 3 to 5 years. In systems with a regularly scheduled maintenance program, leaking traps should account for less than 5% of the trap population[19].

Recommended Steam Trap Testing Intervals

High-Pressure (150 psig and above): Weekly to Monthly

Medium-Pressure (30 to 150 psig): Monthly to Quarterly

Low-Pressure (below 30 psig): Annually

CIFAR encourages facility management to consult the US Department of Energy Steam Trap Performance Assessment document to design a steam trap management program[20]. Please consult Appendix D for a Steam Traps DOE Industrial Best Practices Energy Tips publication[21].

Education and training resources from the US DOE Steam Systems Program offer training workshops, webinars, tip sheets, technical publications and software tools[22].

Summary of Recommendations

The facility's boiler efficiency is high but there are opportunities to enhance steam system productivity. Short term low-cost measures include the installation of steam blow down recovery systems, insulating steam valves, and adopting steam trap maintenance practices. Another no-cost short term measure is to switch partial steam production from boiler # 3 to boilers # 1 and # 2. A medium-term opportunity is to install a combined heat and power system to produce 718 kilo-Watts (kW) of distributed electricity generation.

[19] DOE Energy Tips. Steam Trap Inspection and Repair. http://www1.eere.energy.gov/manufacturing/tech_deployment/pdfs/steam1_traps.pdf
[20] http://www1.eere.energy.gov/femp/pdfs/FTA_SteamTrap.pdf
[21] DOE, Steam Tip Sheet #1 , http://www1.eere.energy.gov/manufacturing/tech_deployment/pdfs/steam1_traps.pdf
[22] US DOE Steam Systems Program http://www1.eere.energy.gov/manufacturing/tech_deployment/steam.html

Appendix A.
Heat Recovery Best Practices

U.S. DEPARTMENT OF ENERGY | Energy Efficiency & Renewable Energy

ADVANCED MANUFACTURING OFFICE

Energy Tips: STEAM

Steam Tip Sheet #10

Recover Heat from Boiler Blowdown

Heat can be recovered from boiler blowdown by using a heat exchanger to preheat boiler makeup water. Any boiler with continuous blowdown exceeding 5% of the steam rate is a good candidate for the introduction of blowdown waste heat recovery. Larger energy savings occur with high-pressure boilers. The following table shows the potential for heat recovery from boiler blowdown.

Recoverable Heat from Boiler Blowdown

Blowdown Rate, % Boiler Feedwater	Heat Recovered, Million Btu per hour (MMBtu/hr)				
	Steam Pressure, psig				
	50	100	150	250	300
2	0.45	0.5	0.55	0.65	0.65
4	0.9	1.0	1.1	1.3	1.3
6	1.3	1.5	1.7	1.9	2.0
8	1.7	2.0	2.2	2.6	2.7
10	2.2	2.5	2.8	3.2	3.3
20	4.4	5.0	5.6	6.4	6.6

Based on a steam production rate of 100,000 pounds per hour, 60°F makeup water, and 90% heat recovery.

Example

In a plant where the fuel cost is $8.00 per million Btu ($8.00/MMBtu), a continuous blowdown rate of 3,200 pounds per hour (lb/hr) is maintained to avoid the buildup of high concentrations of dissolved solids. What are the annual savings if a makeup water heat exchanger is installed that recovers 90% of the blowdown energy losses? The 80% efficient boiler produces 50,000 pounds per hour (lb/hr) of 150-pounds-per-square-inch-gauge (psig) steam. It operates for 8,000 hours per year. The blowdown ratio is:

$$\text{Blowdown Ratio} = \frac{3{,}200}{3{,}200 + 50{,}000} = 6.0\%$$

From the table, the heat recoverable corresponding to a 6% blowdown ratio with a 150-psig boiler operating pressure is 1.7 MMBtu/hr. Since the table is based on a steam production rate of 100,000 lb/hr, the annual savings for this plant are:

Annual Energy Savings = [1.7 MMBtu/hr x (50,000 lb/hr/100,000 lb/hr) x 8,000 hr/yr]/0.80
= 8,500 MMBtu

Annual Cost Savings = 8,500 MMBtu/yr x $8.00/MMBtu
= $68,000

Suggested Actions

If there is a continuous blowdown system in place, consider installing a heat recovery system. If there is a noncontinuous blowdown system, then consider the option of converting it to a continuous blowdown system coupled with heat recovery.

http://www1.eere.energy.gov/manufacturing/tech_deployment/pdfs/steam10_boiler_blowdown.pdf

Install an Automatic Blowdown-Control System

Background

To reduce the levels of suspended and total dissolved solids in a boiler, water is periodically discharged or blown down. High dissolved solids concentrations can lead to foaming and carryover of boiler water into the steam. This could lead to water hammer, which may damage piping, steam traps, or process equipment. Surface blowdown removes dissolved solids that accumulate near the boiler liquid surface and is often a continuous process.

Suspended and dissolved solids can also form sludge. Sludge must be removed because it reduces the heat-transfer capabilities of the boiler, resulting in poor fuel-to-steam efficiency and possible pressure vessel damage. Sludge is removed by mud or bottom blowdown.

During the surface blowdown process, a controlled amount of boiler water containing high dissolved solids concentrations is discharged into the sewer. In addition to wasting water and chemicals, the blowdown process wastes heat energy, because the blowdown liquid is at the same temperature as the steam produced—approximately 366°F for 150-pounds-per-square-inch-gauge (psig) saturated steam—and blowdown heat recovery systems, if available, are not 100% efficient. (Waste heat may be recovered through the use of a blowdown heat exchanger or a flash tank in conjunction with a heat recovery system. For more information, see Steam Tip Sheet #10, *Recover Heat from Boiler Blowdown*.)

Advantages of Automatic Control Systems

With manual control of surface blowdown, there is no way to determine the concentration of dissolved solids in the boiler water, nor the optimal blowdown rate. Operators do not know when to blow down the boiler, or for how long. Likewise, using a fixed rate of blowdown does not take into account changes in makeup and feedwater conditions, or variations in steam demand or condensate return.

An automatic blowdown-control system optimizes surface-blowdown rates by regulating the volume of water discharged from the boiler in relation to the concentration of dissolved solids present. Automatic surface-blowdown control systems maintain water chemistry within acceptable limits, while minimizing blowdown and reducing energy losses. Cost savings come from the significant reduction in the consumption, disposal, treatment, and heating of water.

Suggested Actions

- Review your blowdown and makeup water treatment practices; compare them with American Society of Mechanical Engineers (ASME) practices.
- If a continuous-blowdown system is in place, determine the savings an automatic blowdown-control system could attain. Install conductivity monitoring and automatic blowdown-control equipment if the proposed project meets your cost-effectiveness criteria.
- Determine the energy savings and cost-effectiveness from using a heat exchanger to recover energy from the blowdown and preheat boiler makeup water. Blowdown heat-recovery systems may be economical for boilers with blowdown rates as low as 500 lb/hr.

How it Works

With an automatic blowdown-control system, high- or low-pressure probes are used to measure conductivity. The conductivity probes provide feedback to a blowdown controller that compares the measured conductivity with a set-point value, and then transmits an output signal that drives a modulating blowdown release valve.

Conductivity is a measure of the electrical current carried by positive and negative ions when a voltage is applied across electrodes in a water sample. Conductivity increases when the dissolved ion concentrations increase.

The measured current is directly proportional to the specific conductivity of the fluid. Total dissolved solids, silica, chloride concentrations, and/or alkalinity contribute to conductivity measurements. These chemical species are reliable indicators of salts and other contaminants in the boiler water.

Applications

Boilers without a blowdown heat-recovery system and with high blowdown rates offer the greatest energy-savings potential. The optimum blowdown rate is determined by a number of factors, including boiler type, operating pressure, water treatment, and makeup-water quality. Savings also depend upon the quantity of condensate returned to the boiler. With a low percentage of condensate return, more makeup water is required and additional blowdown must occur. Boiler blowdown rates often range from 1% to 8% of the feedwater flow rate, but they can be as high as 20% to maintain silica and alkalinity limits when the makeup water has a high solids content.

Price and Performance Example

For a 100,000 pound-per-hour (lb/hr) steam boiler, decreasing the required blowdown rate from 8% to 6% of the feedwater flow rate will reduce makeup water requirements by approximately 2,300 lb/hr. (See Steam Tip Sheet #9, *Minimize Boiler Blowdown*.) Annual energy, water, and chemicals savings due to blowdown rate reductions for a sample system are summarized in the table below. In many cases, these savings can provide a 1- to 3-year simple payback on the investment in an automatic blowdown-control system.

Savings Through Installation of Automatic Blowdown-Control System

Blowdown Reduction, lb/hr	Annual Savings, $		
	Fuel	Water and Chemicals	Total
1,000	27,200	4,200	31,400
2,000	54,400	8,400	62,800
4,000	108,800	16,800	125,600

Note: Based on continuous operation of a 150-psig, natural gas-fired steam boiler with fuel valued at $8.00 per million Btu ($8.00/MMBtu), a makeup water temperature of 60°F, and a boiler efficiency of 80%. Water, sewage, and chemical treatment costs are estimated at $0.004 per gallon.

Purchasing and installing an automatic blowdown-control system can cost from $2,500 to $6,000. The complete system consists of a low- or high-pressure conductivity probe, temperature compensation and signal conditioning equipment, and a blowdown-modulating valve. Some systems are designed to monitor both feedwater and blowdown conductivity from multiple boilers. A continuous conductivity recording capability might also be desired. The total cost of the automatic blowdown system is dependent upon the system operating pressure and the design and performance options specified.

Recommended Practices

The American Society of Mechanical Engineers (ASME) has developed a consensus on operating practices for boiler blowdown. Sections VI and VII of the ASME Boiler and Pressure Vessel Code describe recommended practices. The ASME Boiler and Pressure Vessel Code can be ordered through the ASME website at *www.asme.org*.

http://www1.eere.energy.gov/manufacturing/tech_deployment/pdfs/steam23_control_system.pdf

Appendix B
SSAT CHP Project Results Summary

Steam System Assessment Tool

2 Header Model

Results Summary

SSAT Default 2 Header Model

Model Status : OK

Cost Summary ($ '000s/yr)	Current Operation	After Projects	Reduction	
Power Cost	1,148	931	217	18.9%
Fuel Cost	1,803	1,837	-34	-1.9%
Make-Up Water Cost	0	0	0	-2.2%
Total Cost (in $ '000s/yr)	**2,951**	**2,768**	**183**	**6.2%**

On-Site Emissions	Current Operation	After Projects	Reduction	
CO2 Emissions	42771 klb/yr	43577 klb/yr	-806 klb/yr	-1.9%
SOx Emissions	0 klb/yr	0 klb/yr	0 klb/yr	N/A
NOx Emissions	85 klb/yr	86 klb/yr	-2 klb/yr	-1.9%

Power Station Emissions	Reduction After Projects	Total Reduction	
CO2 Emissions	2253 klb/yr	1447 klb/yr	-
SOx Emissions	7 klb/yr	7 klb/yr	-
NOx Emissions	5 klb/yr	3 klb/yr	-

Note - Calculates the impact of the change in site power import on emissions from an external power station. Total reduction values are for site + power station

Utility Balance	Current Operation	After Projects	Reduction	
Power Generation	0 kW	718 kW	-	-
Power Import	3800 kW	3082 kW	718 kW	18.9%
Total Site Electrical Demand	3800 kW	3800 kW	-	-
Boiler Duty	184.1 MMBtu/h	187.5 MMBtu/h	-3.5 MMBtu/h	-1.9%
Fuel Type	Natural Gas	Natural Gas	-	-
Fuel Consumption	184013.7 s cu.ft/h	187482 s cu.ft/h	-3468.3 s cu.ft/h	-1.9%
Boiler Steam Flow	147.4 klb/h	150.2 klb/h	-2.8 klb/h	-1.9%
Fuel Cost (in $/MMBtu)	4.90	4.90	-	-
Power Cost (as $/MMBtu)	44.25	44.25	-	-
Make-Up Water Flow	358 gal/h	366 gal/h	-8 gal/h	-2.2%

Turbine Performance	Current Operation	After Projects
HP to LP steam rate	Not in use	9 kWh/klb
HP to Condensing steam rate	Not in use	Not in use

Marginal Steam Costs	
(based on current operation)	
HP ($/klb)	----->
LP ($/klb)	----->

List of Selected Projects
Install HP to LP steam turbine

Appendix C
Steam Turbines

U.S. DEPARTMENT OF ENERGY | Energy Efficiency & Renewable Energy

ADVANCED MANUFACTURING OFFICE

Energy Tips: STEAM

Steam Tip Sheet #21

Consider Steam Turbine Drives for Rotating Equipment

Steam turbines are well suited as prime movers for driving boiler feedwater pumps, forced or induced-draft fans, blowers, air compressors, and other rotating equipment. This service generally calls for a backpressure noncondensing steam turbine. The low-pressure steam turbine exhaust is available for feedwater heating, preheating of deaerator makeup water, and/or process requirements.

Steam turbine drives are equipped with throttling valves or nozzle governors to modulate steam flow and achieve variable speed operation. The steam turbine drive is thus capable of serving the same function as an induction motor coupled to an inverter or adjustable speed drive. Steam turbine drives can operate over a broad speed range and do not fail when overloaded. They also exhibit the high starting torque required for constant torque loads such as positive displacement pumps.

Steam turbines are inherently rugged and reliable low-maintenance devices. They are easy to control and offer enclosed, nonsparking operation suitable for use in explosive atmospheres or highly corrosive environments. Steam turbines provide fast, reliable starting capability and are particularly adaptable for direct connection to equipment that rotates at high speeds. Steam turbine drives may be installed for continuous duty under severe operating conditions, or used for load shaping (e.g., demand limiting), standby, or emergency service.

Steam turbine performance is expressed in terms of isentropic efficiency or steam rate (the steam requirement of the turbine per unit of shaft power produced). Steam rates are given in terms of pounds per horsepower-hour (lb/hp-hr) or pounds per kilowatt-hour (lb/kWh).

Example

A 300-hp steam turbine has an isentropic efficiency of 43% and a steam rate of 26 lb/hp-hr given the introduction of 600-pounds-per-square-inch-gauge (psig)/750°F steam with a 40-psig/486°F exhaust. What steam flow is necessary to replace a fully-loaded 300-hp feedwater pump drive motor?

$$\text{Steam Flow} = 26 \text{ lb/hp-hr} \times 300 \text{ hp} = 7{,}800 \text{ lb/hr}$$

An examination of the ASME steam tables reveals that this steam turbine would utilize 103 Btu/lb of steam or 0.80 million Btu (MMBtu) of thermal energy per hour. Given a natural gas cost of $8.00/MMBtu and a boiler efficiency of 80%, the fuel-related cost of steam turbine operation is (0.80 MMBtu/hr/0.80 x $8.00/MMBtu) = $8.00/hr.

In comparison, a 300-hp motor with a full-load efficiency of 95% would require:

$$300 \text{ hp} \times (0.746 \text{ kW/hp}) \times 100/95 = 235.6 \text{ kWh/hr}$$

In this example, the steam turbine drive would provide energy cost savings when the price of electricity exceeds:

$$\frac{\$8.00/\text{hr}}{235.6 \text{ kWh/hr} \times \$/100 \text{ cents}} = 3.4 \text{ cents/kWh } (\$0.034/\text{kWh})$$

Suggested Actions

Consider replacing electric motors with steam turbine drives if your facility:

- Contains a high-pressure boiler or a boiler designed to operate at a higher pressure than process requirements.
- Has time-of-use (e.g., on/off peak, real-time, etc.) energy purchase and resale contracts with periods when electric power costs are substantially higher than fuel costs.
- Has pumps or other rotating equipment requiring variable speed operation.
- Requires continued equipment operation during electrical power supply interruptions.

The total annual energy savings are strongly dependent upon the facility energy cost and the hours per year of feedwater pump operation. Annual energy savings are given in the table below for various electrical rates and pump operating schedules. In addition to operating cost savings, steam turbine maintenance costs should be compared with electric motor maintenance expenses.

Annual Energy Savings when Using a Steam Turbine Feedwater Pump Drive*, $

Electricity Costs, $/kWh	Feedwater Pump Annual Operating Hours				
	2,000	4,000	6,000	7,000	8,760
0.04	2,830	5,650	8,480	9,900	12,380
0.05	7,540	15,080	22,620	26,390	33,020
0.075	19,320	38,640	55,960	67,620	84,620

*Savings are based upon operation of a 300-hp steam turbine drive with a steam rate of 26 lb/hp-hr. A natural gas cost of $8.00/MMBtu is assumed.

Steam Turbine Flexibility

Equipment redundancy and improved reliability can be obtained by mounting a steam turbine drive and an electric motor on opposite ends of the driven-equipment shaft. You can then select either the motor or turbine as the prime mover by increasing or decreasing the turbine speed relative to the synchronous speed of the motor.

Steam Tip Sheet information adapted from material provided by the TurboSteam Corporation and reviewed by the AMO Steam Technical Subcommittee.

Resources

U.S. Department of Energy—DOE's software, the *Steam System Assessment Tool and Steam System Scoping Tool*, can help you evaluate and identify steam system improvements. In addition, refer to *Improving Steam System Performance: A Sourcebook for Industry* for more information on steam system efficiency opportunities.

Visit the Advanced Manufacturing Office website at *manufacturing.energy.gov* to access these and many other industrial efficiency resources and information on training.

U.S. DEPARTMENT OF ENERGY
Energy Efficiency & Renewable Energy

Advanced Manufacturing Office
Energy Efficiency and Renewable Energy
U.S. Department of Energy
Washington, DC 20585-0121
manufacturing.energy.gov

The Advanced Manufacturing Office (AMO) works with diverse partners to develop and deploy technologies and best practices that will help U.S. manufacturers continually improve their energy performance and succeed in global markets. AMO's Better Plants program works with U.S. corporations through a CEO-endorsed pledge to improve energy efficiency. AMO's tools, training, resources, and recognition programs can help build energy management capacity within the industrial sector and supply chains. Use these resources to comply with requirements of the ISO 50001 standard and the Superior Energy Performance program.

With our partners, AMO leverages additional federal, state, utility, and local resources to help manufacturers save energy, reduce climate and environmental impacts, enhance workforce development, and improve national energy security and competitiveness throughout the supply chain.

DOE/GO-102012-3396 • January 2012

http://www1.eere.energy.gov/manufacturing/tech_deployment/pdfs/steam21_rotating_equip.pdf

Appendix C
DOE Insulation Publications

U.S. DEPARTMENT OF ENERGY | Energy Efficiency & Renewable Energy

ADVANCED MANUFACTURING OFFICE

Energy Tips: STEAM

Steam Tip Sheet #2

Insulate Steam Distribution and Condensate Return Lines

Uninsulated steam distribution and condensate return lines are a constant source of wasted energy. The table shows typical heat loss from uninsulated steam distribution lines. Insulation can typically reduce energy losses by 90% and help ensure proper steam pressure at plant equipment. Any surface over 120°F should be insulated, including boiler surfaces, steam and condensate return piping, and fittings.

Insulation frequently becomes damaged or is removed and never replaced during steam system repair. Damaged or wet insulation should be repaired or immediately replaced to avoid compromising the insulating value. Eliminate sources of moisture prior to insulation replacement. Causes of wet insulation include leaking valves, external pipe leaks, tube leaks, or leaks from adjacent equipment. After steam lines are insulated, changes in heat flows can influence other parts of the steam system.

Heat Loss Per 100 Feet of Uninsulated Steam Line

Distribution Line Diameter, inches	Heat Loss Per 100 Feet of Uninsulated Steam Line, MMBtu/yr			
	Steam Pressure, psig			
	15	150	300	600
1	140	285	375	495
2	235	480	630	840
4	415	850	1,120	1,500
8	740	1,540	2,030	2,725
12	1,055	2,200	2,910	3,920

Based on horizontal steel pipe, 75°F ambient air, no wind velocity, and 8,760 operating hours per year.

Example

In a plant where the fuel cost is $8.00 per million Btu ($8.00/MMBtu), a survey of the steam system identified 1,120 feet (ft) of bare 1-inch-diameter steam line, and 175 feet of bare 2-inch line, both operating at 150 pounds per square inch gauge (psig). An additional 250 ft of bare 4-inch-diameter line operating at 15 psig was found. From the table, the quantity of heat lost per year is:

1-inch line:	1,120 ft x 285 MMBtu/yr per 100 ft	=	3,192 MMBtu/yr
2-inch line:	175 ft x 480 MMBtu/yr per 100 ft	=	840 MMBtu/yr
4-inch line:	250 ft x 415 MMBtu/yr per 100 ft	=	1,037 MMBtu/yr
	Total Heat Loss	=	5,069 MMBtu/yr

Given a boiler efficiency of 80%, the annual cost savings from installing 90% efficient insulation is:

(0.90 x $8.00/MMBtu x 5,069 MMBtu/yr)/0.80 = $45,620

Suggested Actions

Conduct a survey of your steam distribution and condensate return piping, install insulation, and start to save.

Install Removable Insulation on Valves and Fittings

During maintenance, the insulation that covers pipes, valves, and fittings is often damaged or removed and not replaced. Pipes, valves, and fittings that are not insulated can be safety hazards and sources of heat loss. Removable and reusable insulating pads are available to cover almost any surface. The pads are made of a noncombustible inside cover, insulation material, and a noncombustible outside cover that resists tears and abrasion. Material used in the pads resists oil and water and has been designed for temperatures up to 1,600°F. Wire laced through grommets or straps with buckles hold the pads in place.

Applications

Reusable insulating pads are commonly used in industrial facilities for insulating flanges, valves, expansion joints, heat exchangers, pumps, turbines, tanks, and other irregular surfaces. The pads are flexible and vibration-resistant and can be used with equipment that is horizontally or vertically mounted or that is difficult to access. Any high-temperature piping or equipment should be insulated to reduce heat loss, reduce emissions, and improve safety. As a general rule, any surface that reaches temperatures greater than 120°F should be insulated to protect personnel. Insulating pads can be easily removed for periodic inspection or maintenance, and replaced as needed. Insulating pads can also contain built-in acoustical barriers to help control noise.

Energy Savings

The table below summarizes energy savings due to the use of insulating valve covers for a range of valve sizes and operating temperatures. These values were calculated using a computer program that meets the requirements of ASTM C 680—*Heat Loss and Surface Temperature Calculations*. Energy savings is defined as the difference in heat loss between the uninsulated valve and the insulated valve operating at the same temperature.

Energy Savings* from Installing Removable Insulated Valve Covers, Btu/hr

Operating Temperature, °F	Valve Size, inches					
	3	4	6	8	10	12
200	800	1,090	1,560	2,200	2,900	3,300
300	1,710	2,300	3,300	4,800	6,200	7,200
400	2,900	3,400	5,800	8,300	10,800	12,500
500	4,500	6,200	9,000	13,000	16,900	19,700
600	6,700	9,100	13,300	19,200	25,200	29,300

*Based on installation of a 1-inch thick insulating pad on an ANSI 150-pound-class flanged valve with an ambient temperature of 65°F and zero wind speed.

Example

Interpolating from the table above, calculate the annual fuel and dollar savings from installing a 1-inch thick insulating pad on an uninsulated 6-inch gate valve in

Suggested Actions

- Conduct a survey of your steam distribution system to identify locations where removable and reusable insulation covers can be used.
- Use removable insulation on components requiring periodic inspections or repair.

[23] http://www1.eere.energy.gov/manufacturing/tech_deployment/pdfs/steam17_valves_fittings.pdf

Appendix D
Steam Trap Maintenance

U.S. DEPARTMENT OF ENERGY | Energy Efficiency & Renewable Energy

ADVANCED MANUFACTURING OFFICE

Energy Tips: STEAM

Steam Tip Sheet #1

Inspect and Repair Steam Traps

In steam systems that have not been maintained for 3 to 5 years, between 15% to 30% of the installed steam traps may have failed—thus allowing live steam to escape into the condensate return system. In systems with a regularly scheduled maintenance program, leaking traps should account for less than 5% of the trap population. If your steam distribution system includes more than 500 traps, a steam trap survey will probably reveal significant steam losses.

Example

In a plant where the value of steam is $10.00 per thousand pounds ($10.00/1,000 lb), an inspection program indicates that a trap on a 150-pound-per-square-inch-gauge (psig) steam line is stuck open. The trap orifice is 1/8th inch in diameter. The table shows the estimated steam loss as 75.8 pounds per hour (lb/hr). After the failed trap is repaired, annual savings are:

Annual Savings = 75.8 lb/hr x 8,760 hr/yr x $10.00/1,000 lb
= $6,640

Leaking Steam Trap Discharge Rate*

Trap Orifice Diameter, Inches	Steam Loss, lb/hr			
	Steam Pressure, psig			
	15	100	150	300
1/32	0.85	3.3	4.8	-
1/16	3.4	13.2	18.9	36.2
1/8	13.7	52.8	75.8	145
3/16	30.7	119	170	326
1/4	54.7	211	303	579
3/8	123	475	682	1,303

*From the Boiler Efficiency Institute. Steam is discharging to atmospheric pressure through a re-entrant orifice with a coefficient of discharge equal to 0.72.

Suggested Actions

Steam traps are tested primarily to determine whether they are functioning properly and not allowing live steam to blow through.

- Establish a program for the regular systematic inspection, testing, and repair of steam traps.
- Include a reporting mechanism to ensure thoroughness and to provide a means of documenting energy and dollar savings.
- Consider online monitoring of the most important steam traps or those associated with your most important processes to quickly identify steam loss trends.

24

[24] DOE Tip Sheet # 1, http://www1.eere.energy.gov/manufacturing/tech_deployment/pdfs/steam1_traps.pdf